Work Order ID 97644

97644

Thursday, February 21, 2013 10:23:18 AM

Item ID: D4030-041 **Accept** *N900040100* **Setup Start** *NS1*

Revision ID: **Stop** *NS2*

Item Name: Long Basket Assembly (350)

Start Date: 2/21/2013 **Start Qty:** 1.00 *1*

Required Date: 2/28/2013 **Req'd Qty:** 1.00 *1*

Reference:

Cust Item ID:

Customer:

Approvals: **Process Plan:** RL **Date:** 13-02-21 **Tooling:** _____ **Date:** _____

QC: _____ **Date:** _____ **SPC (Y/N):** _____ **Date:** _____

Run Start *NR1*

Stop *NR2*

Sequence ID/ Work Center ID	Operation Description	Set Up/ Run Hours	Tool ID	Tool #	Plan Code	Accept Qty	Reject Qty	Reject Number	Insp. Stamp
Draw Nbr	**Revision Nbr**								
D4030	C								
100	Pick Kit	0.00				1x			SP 13-3-13
100									
Packaging	**Memo**	0.00							
Packaging									
110	Assemble as per dwg	0.00				1x			13/03/15
110									
HandFinish	**Memo**	0.00							
Hand Finishing	****Mask label plate to size of D4086 label, use scotchbrite red pad to lightly sand area for label, apply label ****								
120	QC5- Inspect part completeness to step on W/O	0.00 DAS 16 9-8 13/03/15				40			
120									
QC	**Memo**	0.00							
Quality Control									

DQA: _____ Date: _____

NCR: Yes / No

WORK ORDER NON-CONFORMANCE / UPDATE

QA Closed: Date:

Work Order: _____

Part No. _____

NCR No. _____

DISPOSITION

- Rework ☐
- Scrap ☐
- Use-as-is ☐
- Work Order Update ☐

AGAINST DEPARTMENT/PROCESS

- Skid-tube ☐
- Machining ☐
- Thermoforming ☐
- Large Fab ☐
- Crosstube ☐
- Small Fab ☐
- Finishing ☐
- Composite ☐
- Water Jet ☐
- Prod. Eng. Coor. ☐
- Rec/Store/Packaging ☐
- Supplier ☐
- Engineering ☐
- Quality ☐
- Other ☐
- ☐

Root Cause		Date	Step	Qty	Description of work order update or Non-conformance	Initial Chief Eng	Action Description	Sign & Date	Verification	QC Inspector
Doc/Data										
Equip/Tooling										
Operator										
Material										
Setup										
Other										
Process										
Supplier										
Training										
Unapproved										

FAULT CATEGORY

Landing Gear

- ☐ Bending
- ☐ Centre Not Concentric to O/S
- ☐ Cracks
- ☐ Crushed/Crimped
- ☐ Cuffs
- ☐ Heat Treat
- ☐ Inspection Strip in Tube
- ☐ Ripples in Bend
- ☐ Torque Waves in Extrusion
- ☐ Turning Sequence
- ☐ Wave/Twist in Tube

General

- ☐ Bend
- ☐ BOM/Route
- ☐ Broken/Damaged
- ☐ Burrs
- ☐ Contamination
- ☐ Countersink
- ☐ Cut Too Short
- ☐ Drill Holes
- ☐ Drawing
- ☐ Finish
- ☐ Folio
- ☐ Grain
- ☐ Hardware
- ☐ Inspection Incomplete
- ☐ Instructions Incomplete/Unclear
- ☐ Maintenance
- ☐ Mislabeled
- ☐ Misread
- ☐ Offset
- ☐ Out of Calibration
- ☐ Out of Sequence
- ☐ Outside Dimensions
- ☐ Ovalized
- ☐ Over/Under tolerance
- ☐ Part Incorrect
- ☐ Part Lost/Missing
- ☐ Part Moved
- ☐ Positioned Wrong
- ☐ Power Loss/Surge
- ☐ Pressure/Forced
- ☐ Temperature/Cure
- ☐ Weld
- ☐ Wrong Stock Pulled
- ☐ Other

_____

_____

_____

Work Order ID 97644

97644

Thursday, February 21, 2013 10:23:18 AM

Item ID: D4030-041 **Accept** *N900040100* **Setup Start** *NS1*

Revision ID: **Stop** *NS2*

Item Name: Long Basket Assembly (350)

Start Date: 2/21/2013 **Start Qty:** 1.00 *1* **Cust Item ID:**

Required Date: 2/28/2013 **Req'd Qty:** 1.00 *1* **Customer:**

Reference:

Run Start *NR1*

Stop *NR2*

Approvals: **Process Plan:** _____ **Date:** _____ **Tooling:** _____ **Date:** _____

QC: _____ **Date:** _____ **SPC (Y/N):** _____ **Date:** _____

Sequence ID/ Work Center ID	Operation Description	Set Up/ Run Hours	Tool ID	Tool #	Plan Code	Accept Qty	Reject Qty	Reject Number	Insp. Stamp
130	Identify as per dwg & Stock Location:_____	0.00				DAS 08-8		13/3/19	
130 Packaging Packaging	**Memo**	0.00	PPP 97633						
140	QC21- Final Inspection - Work Order Release	0.00							13/3/20
140 QC Quality Control	**Memo**	0.00							

MCJ 13-03-20

DQA: _____ Date: _____

NCR: Yes / No

WORK ORDER NON-CONFORMANCE / UPDATE

QA Closed: Date:

Work Order: _____

Part No. _____

NCR No. _____

DISPOSITION

- Rework ☐
- Scrap ☐
- Use-as-is ☐
- Work Order Update ☐

AGAINST DEPARTMENT/PROCESS

- Skid-tube ☐
- Machining ☐
- Thermoforming ☐
- Large Fab ☐
- Crosstube ☐
- Small Fab ☐
- Finishing ☐
- Composite ☐
- Water Jet ☐
- Prod. Eng. Coor. ☐
- Rec/Store/Packaging ☐
- Supplier ☐
- Engineering ☐
- Quality ☐
- Other ☐

Root Cause		Date	Step	Qty	Description of work order update or Non-conformance	Initial Chief Eng	Action Description	Sign & Date	Verification	QC Inspector
Doc/Data										
Equip/Tooling										
Operator										
Material										
Setup										
Other										
Process										
Supplier										
Training										
Unapproved										

FAULT CATEGORY

Landing Gear

- ☐ Bending
- ☐ Centre Not Concentric to O/S
- ☐ Cracks
- ☐ Crushed/Crimped
- ☐ Cuffs
- ☐ Heat Treat
- ☐ Inspection Strip in Tube
- ☐ Ripples in Bend
- ☐ Torque Waves in Extrusion
- ☐ Turning Sequence
- ☐ Wave/Twist in Tube

General

- ☐ Bend
- ☐ BOM/Route
- ☐ Broken/Damaged
- ☐ Burrs
- ☐ Contamination
- ☐ Countersink
- ☐ Cut Too Short
- ☐ Drill Holes
- ☐ Drawing
- ☐ Finish
- ☐ Folio
- ☐ Grain
- ☐ Hardware
- ☐ Inspection Incomplete
- ☐ Instructions Incomplete/Unclear
- ☐ Maintenance
- ☐ Mislabeled
- ☐ Misread
- ☐ Offset
- ☐ Out of Calibration
- ☐ Out of Sequence
- ☐ Outside Dimensions
- ☐ Ovalized
- ☐ Over/Under tolerance
- ☐ Part Incorrect
- ☐ Part Lost/Missing
- ☐ Part Moved
- ☐ Positioned Wrong
- ☐ Power Loss/Surge
- ☐ Pressure/Forced
- ☐ Temperature/Cure
- ☐ Weld
- ☐ Wrong Stock Pulled
- ☐ Other

_____

_____

_____

Picklist Print

Thursday, February 21, 2013 10:23:27 AM

Work Order ID: 97644 *97644*

Parent Item: D4030-041 *D4030-041*

Parent Item Name: Long Basket Assembly (350)

Start Date: 2/21/2013 **Required Date:** 2/28/2013

Start Qty: 1.00 **Required Qty:** 1.00

Comments: IPP Rev:A new issue DD 10.03.23 verified by:EC IPP Rev:B as per dwg revB DD 10.04.20 verified by:EC IPP Rev:C as per dwg revC DD 10.08.18 verified by:EC IPP Rev D 12.03.27 per NCR12-1239 EC verified by:JLM

Component Item ID/ Item Name	Replacement Item ID	Mfg/ Purch	Bin Item	Primary Location	Last Location	Route Seq ID	Unit of Measure	Qty on Hand	Qty per Kit	Total Qty	Qty Issued	Date Issued	Status
D4086-200		Manufactured	No				Each	15.0000		1			
D4086-200									**		SP		
Placard, Max Load													
				Location			**Loc Qty**		**Loc Code**				
				ST093			15						
					88611		5						
					96251		10			1X			
D2530		Manufactured	No		—	100	Each	5.0000	1	1			
D2530									**		SP		
Handle Weldment													
				Location			**Loc Qty**		**Loc Code**				
				ST255			5						
					94474		5			1X			
D2535		Manufactured	No		—	100	Each	110.0000	2	2			
D2535									**		SP 13-3-13		
Spring													
				Location			**Loc Qty**		**Loc Code**				
				ST011			110						
					86333		10			2X			
					92570		50						
					96248		50						

DQA: _____ Date: _____

NCR: Yes / No

WORK ORDER NON-CONFORMANCE / UPDATE

QA Closed: Date:

Work Order: _____

Part No. _____

NCR No. _____

DISPOSITION

- Rework ☐
- Scrap ☐
- Use-as-is ☐
- Work Order Update ☐

AGAINST DEPARTMENT/PROCESS

- Skid-tube ☐
- Machining ☐
- Thermoforming ☐
- Large Fab ☐
- Crosstube ☐
- Small Fab ☐
- Finishing ☐
- Composite ☐
- Water Jet ☐
- Prod. Eng. Coor. ☐
- Rec/Store/Packaging ☐
- Supplier ☐
- Engineering ☐
- Quality ☐
- Other ☐

Root Cause		Date	Step	Qty	Description of work order update or Non-conformance	Initial Chief Eng	Action Description	Sign & Date	Verification	QC Inspector
Doc/Data	☐									
Equip/Tooling	☐									
Operator	☐									
Material	☐									
Setup	☐									
Other	☐									
Process	☐									
Supplier	☐									
Training	☐									
Unapproved	☐									

FAULT CATEGORY

Landing Gear

- ☐ Bending
- ☐ Centre Not Concentric to O/S
- ☐ Cracks
- ☐ Crushed/Crimped.
- ☐ Cuffs
- ☐ Heat Treat
- ☐ Inspection Strip in Tube
- ☐ Ripples in Bend
- ☐ Torque Waves in Extrusion
- ☐ Turning Sequence
- ☐ Wave/Twist in Tube

General

- ☐ Bend
- ☐ BOM/Route
- ☐ Broken/Damaged
- ☐ Burrs
- ☐ Contamination
- ☐ Countersink
- ☐ Cut Too Short
- ☐ Drill Holes
- ☐ Drawing
- ☐ Finish
- ☐ Folio
- ☐ Grain
- ☐ Hardware
- ☐ Inspection Incomplete
- ☐ Instructions Incomplete/Unclear
- ☐ Maintenance
- ☐ Mislabeled
- ☐ Misread
- ☐ Offset
- ☐ Out of Calibration
- ☐ Out of Sequence
- ☐ Outside Dimensions
- ☐ Ovalized
- ☐ Over/Under tolerance
- ☐ Part Incorrect
- ☐ Part Lost/Missing
- ☐ Part Moved
- ☐ Positioned Wrong
- ☐ Power Loss/Surge
- ☐ Pressure/Forced
- ☐ Temperature/Cure
- ☐ Weld
- ☐ Wrong Stock Pulled
- ☐ Other

_____

_____

_____

Picklist Print

Thursday, February 21, 2013 10:23:27 AM

Work Order ID: 97644 *97644*

Parent Item: D4030-041 *D4030-041*

Parent Item Name: Long Basket Assembly (350)

Start Date: 2/21/2013 **Required Date:** 2/28/2013

Start Qty: 1.00 **Required Qty:** 1.00

D2537	Manufactured	No		100	Each	98.0000	2	2
D2537						**		
Bushing								

Location	Loc Qty	Loc Code
ST011	98	
87524	34	
92711	24	
94713	40	

D3913-041	Manufactured	No		100	Each	0.0000	1	1
D3913-041			B97642 (1x)			**		
Long Basket Base Assemby, 350								
D3914-041	Manufactured	No		100	Each	0.0000	1	1
D3914-041			B97637 (1x)			**		
Long Basket Lid Assembly (350)								
D3917-3	Manufactured	No		100	Each	90.0000	6	6
D3917-3						**		
Washer								

Location	Loc Qty	Loc Code
ST072	90	
92514	29	
94136	5	
94137	6	
94643	50	

DQA: _____ Date: _____

NCR: Yes / No

WORK ORDER NON-CONFORMANCE / UPDATE

QA Closed: Date:

Work Order: _____

Part No. _____

NCR No. _____

DISPOSITION

- Rework ☐
- Scrap ☐
- Use-as-is ☐
- Work Order Update ☐

AGAINST DEPARTMENT/PROCESS

- Skid-tube ☐
- Machining ☐
- Thermoforming ☐
- Large Fab ☐
- Crosstube ☐
- Small Fab ☐
- Finishing ☐
- Composite ☐
- Water Jet ☐
- Prod. Eng. Coor. ☐
- Rec/Store/Packaging ☐
- Supplier ☐
- Engineering ☐
- Quality ☐
- Other ☐

Root Cause		Date	Step	Qty	Description of work order update or Non-conformance	Initial Chief Eng	Action Description	Sign & Date	Verification	QC Inspector
Doc/Data										
Equip/Tooling										
Operator										
Material										
Setup										
Other										
Process										
Supplier										
Training										
Unapproved										

FAULT CATEGORY

Landing Gear

- ☐ Bending
- ☐ Centre Not Concentric to O/S
- ☐ Cracks
- ☐ Crushed/Crimped
- ☐ Cuffs
- ☐ Heat Treat
- ☐ Inspection Strip in Tube
- ☐ Ripples in Bend
- ☐ Torque Waves in Extrusion
- ☐ Turning Sequence
- ☐ Wave/Twist in Tube

General

- ☐ Bend
- ☐ BOM/Route
- ☐ Broken/Damaged
- ☐ Burrs
- ☐ Contamination
- ☐ Countersink
- ☐ Cut Too Short
- ☐ Drill Holes
- ☐ Drawing
- ☐ Finish
- ☐ Folio
- ☐ Grain
- ☐ Hardware
- ☐ Inspection Incomplete
- ☐ Instructions Incomplete/Unclear
- ☐ Maintenance
- ☐ Mislabeled
- ☐ Misread
- ☐ Offset
- ☐ Out of Calibration
- ☐ Out of Sequence
- ☐ Outside Dimensions
- ☐ Ovalized
- ☐ Over/Under tolerance
- ☐ Part Incorrect
- ☐ Part Lost/Missing
- ☐ Part Moved
- ☐ Positioned Wrong
- ☐ Power Loss/Surge
- ☐ Pressure/Forced
- ☐ Temperature/Cure
- ☐ Weld
- ☐ Wrong Stock Pulled
- ☐ Other

_____

_____

_____

Picklist Print

Thursday, February 21, 2013 10:23:27 AM

Work Order ID: 97644 *97644*

Parent Item: D4030-041 *D4030-041*

Parent Item Name: Long Basket Assembly (350)

Start Date: 2/21/2013 **Required Date:** 2/28/2013

Start Qty: 1.00 **Required Qty:** 1.00

D3953-3	Manufactured	No	100	Each	45.0000	2	2	
D3953-3						**		SP
Gas Spring Stud, Lid								

Location	Loc Qty	Loc Code	
GA	1		
87592	1		
ST076	44		
88494	14		
94744	30		2x

D3953-7	Manufactured	No	100	Each	57.0000	2	2	
D3953-7						**		SP
Spring Spacer								

Location	Loc Qty	Loc Code	
ST076	57		
88393	5		
89248	12		2x
94669	40		

D3953-9	Manufactured	No	100	Each	95.0000	2	2	
D3953-9						**		SP 13-3-13
Gas Spring Washer								

Location	Loc Qty	Loc Code	
ST076	95		
94719	50		2x
95127	45		

DQA: _____ Date: _____

NCR: Yes / No

WORK ORDER NON-CONFORMANCE / UPDATE

QA Closed: Date:

Work Order: _____

Part No. _____

NCR No. _____

DISPOSITION

- Rework ☐
- Scrap ☐
- Use-as-is ☐
- Work Order Update ☐

AGAINST DEPARTMENT/PROCESS

- Skid-tube ☐
- Machining ☐
- Thermoforming ☐
- Large Fab ☐
- Crosstube ☐
- Small Fab ☐
- Finishing ☐
- Composite ☐
- Water Jet ☐
- Prod. Eng. Coor. ☐
- Rec/Store/Packaging ☐
- Supplier ☐
- Engineering ☐
- Quality ☐
- Other ☐
- ☐

Root Cause		Date	Step	Qty	Description of work order update or Non-conformance	Initial Chief Eng	Action Description	Sign & Date	Verification	QC Inspector
Doc/Data	☐									
Equip/Tooling	☐									
Operator	☐									
Material	☐									
Setup	☐									
Other	☐									
Process	☐									
Supplier	☐									
Training	☐									
Unapproved	☐									

FAULT CATEGORY

Landing Gear

- ☐ Bending
- ☐ Centre Not Concentric to O/S
- ☐ Cracks
- ☐ Crushed/Crimped
- ☐ Cuffs
- ☐ Heat Treat
- ☐ Inspection Strip in Tube
- ☐ Ripples in Bend
- ☐ Torque Waves in Extrusion
- ☐ Turning Sequence
- ☐ Wave/Twist in Tube

General

- ☐ Bend
- ☐ BOM/Route
- ☐ Broken/Damaged
- ☐ Burrs
- ☐ Contamination
- ☐ Countersink
- ☐ Cut Too Short
- ☐ Drill Holes
- ☐ Drawing
- ☐ Finish
- ☐ Folio
- ☐ Grain
- ☐ Hardware
- ☐ Inspection Incomplete
- ☐ Instructions Incomplete/Unclear
- ☐ Maintenance
- ☐ Mislabeled
- ☐ Misread
- ☐ Offset
- ☐ Out of Calibration
- ☐ Out of Sequence
- ☐ Outside Dimensions
- ☐ Ovalized
- ☐ Over/Under tolerance
- ☐ Part Incorrect
- ☐ Part Lost/Missing
- ☐ Part Moved
- ☐ Positioned Wrong
- ☐ Power Loss/Surge
- ☐ Pressure/Forced
- ☐ Temperature/Cure
- ☐ Weld
- ☐ Wrong Stock Pulled
- ☐ Other _____

Work Order ID: 97644 *97644*

Parent Item: D4030-041 *D4030-041*

Parent Item Name: Long Basket Assembly (350)

Start Date: 2/21/2013 **Required Date:** 2/28/2013

Start Qty: 1.00 **Required Qty:** 1.00

D3953-17	Manufactured	No		100	Each	31.0000	2	2
D3953-17							**	SP
Gas Spring Spacer								

Location	Loc Qty	Loc Code	
ST076	31		
88281	3		
89180	16		2 ✓
~~94578~~	12		

D3953-19	Manufactured	No		100	Each	14.0000	1	1
D3953-19							**	SP
Gas Spring Bracket								

Location	Loc Qty	Loc Code	
ST077	14		
92819	14		1X

D3953-21	Manufactured	No		100	Each	16.0000	1	1
D3953-21							**	SP
Gas Spring Bracket								

Location	Loc Qty	Loc Code	
ST077	16		
85759	4		
94146	12		1X

D3969-3	Manufactured	No		100	Each	14.0000	1	1
D3969-3							**	SP 13-3-13
Spring (Basket Lid)								

Location	Loc Qty	Loc Code	
ST262	14		
91844	14		1X

DQA: _____ Date: _____

NCR: Yes / No

WORK ORDER NON-CONFORMANCE / UPDATE

QA Closed: Date:

Work Order: _____

Part No. _____

NCR No. _____

DISPOSITION

- Rework ☐
- Scrap ☐
- Use-as-is ☐
- Work Order Update ☐

AGAINST DEPARTMENT/PROCESS

- Skid-tube ☐
- Machining ☐
- Thermoforming ☐
- Large Fab ☐
- Crosstube ☐
- Small Fab ☐
- Finishing ☐
- Composite ☐
- Water Jet ☐
- Prod. Eng. Coor. ☐
- Rec/Store/Packaging ☐
- Supplier ☐
- Engineering ☐
- Quality ☐
- Other ☐

Root Cause		Date	Step	Qty	Description of work order update or Non-conformance	Initial Chief Eng	Action Description	Sign & Date	Verification	QC Inspector
Doc/Data	☐									
Equip/Tooling	☐									
Operator	☐									
Material	☐									
Setup	☐									
Other	☐									
Process	☐									
Supplier	☐									
Training	☐									
Unapproved	☐									

FAULT CATEGORY

Landing Gear

- ☐ Bending
- ☐ Centre Not Concentric to O/S
- ☐ Cracks
- ☐ Crushed/Crimped.
- ☐ Cuffs
- ☐ Heat Treat
- ☐ Inspection Strip in Tube
- ☐ Ripples in Bend
- ☐ Torque Waves in Extrusion
- ☐ Turning Sequence
- ☐ Wave/Twist in Tube

General

- ☐ Bend
- ☐ BOM/Route
- ☐ Broken/Damaged
- ☐ Burrs
- ☐ Contamination
- ☐ Countersink
- ☐ Cut Too Short
- ☐ Drill Holes
- ☐ Drawing
- ☐ Finish
- ☐ Folio
- ☐ Grain
- ☐ Hardware
- ☐ Inspection Incomplete
- ☐ Instructions Incomplete/Unclear
- ☐ Maintenance
- ☐ Mislabeled
- ☐ Misread
- ☐ Offset
- ☐ Out of Calibration
- ☐ Out of Sequence
- ☐ Outside Dimensions
- ☐ Ovalized
- ☐ Over/Under tolerance
- ☐ Part Incorrect
- ☐ Part Lost/Missing
- ☐ Part Moved
- ☐ Positioned Wrong
- ☐ Power Loss/Surge
- ☐ Pressure/Forced
- ☐ Temperature/Cure
- ☐ Weld
- ☐ Wrong Stock Pulled
- ☐ Other

_____

_____

_____

Work Order ID: 97644 *97644*

Parent Item: D4030-041 *D4030-041*

Parent Item Name: Long Basket Assembly (350)

Start Date: 2/21/2013 **Required Date:** 2/28/2013

Start Qty: 1.00 **Required Qty:** 1.00

AN3-14A	Purchased	No		100	Each	157.0000	4	4	
AN3-14A						**			SP
Bolt									

Location		Loc Qty	Loc Code	
ST352		57		
	122800	57		4X
ST512		100		
	123759	100		

AN3-16A	Purchased	No		100	Each	148.0000	2	2	
AN3-16A						**			SP
Bolt									

Location		Loc Qty	Loc Code	
GA		47		
	117441	47		
ST352		101		
	122407	51		2X
	123900	50		

AN5-17A	Purchased	No		100	Each	151.0000	4	4	
AN5-17A						**			SP 13-3-13
Bolt									

Location		Loc Qty	Loc Code	
GA		36		
	117872	36		
ST337		115		
	122416	5		
	123831	60		4X
	124215	50		

DQA: _____ Date: _____

NCR: Yes / No

WORK ORDER NON-CONFORMANCE / UPDATE

QA Closed: Date:

Work Order: _____

Part No. _____

NCR No. _____

DISPOSITION

- Rework ☐
- Scrap ☐
- Use-as-is ☐
- Work Order Update ☐

AGAINST DEPARTMENT/PROCESS

- Skid-tube ☐
- Machining ☐
- Thermoforming ☐
- Large Fab ☐
- Crosstube ☐
- Small Fab ☐
- Finishing ☐
- Composite ☐
- Water Jet ☐
- Prod. Eng. Coor. ☐
- Rec/Store/Packaging ☐
- Supplier ☐
- Engineering ☐
- Quality ☐
- Other ☐

Root Cause		Date	Step	Qty	Description of work order update or Non-conformance	Initial Chief Eng	Action Description	Sign & Date	Verification	QC Inspector
Doc/Data										
Equip/Tooling										
Operator										
Material										
Setup										
Other										
Process										
Supplier										
Training										
Unapproved										

FAULT CATEGORY

Landing Gear

- ☐ Bending
- ☐ Centre Not Concentric to O/S
- ☐ Cracks
- ☐ Crushed/Crimped
- ☐ Cuffs
- ☐ Heat Treat
- ☐ Inspection Strip in Tube
- ☐ Ripples in Bend
- ☐ Torque Waves in Extrusion
- ☐ Turning Sequence
- ☐ Wave/Twist in Tube

General

- ☐ Bend
- ☐ BOM/Route
- ☐ Broken/Damaged
- ☐ Burrs
- ☐ Contamination
- ☐ Countersink
- ☐ Cut Too Short
- ☐ Drill Holes
- ☐ Drawing
- ☐ Finish
- ☐ Folio
- ☐ Grain
- ☐ Hardware
- ☐ Inspection Incomplete
- ☐ Instructions Incomplete/Unclear
- ☐ Maintenance
- ☐ Mislabeled
- ☐ Misread
- ☐ Offset
- ☐ Out of Calibration
- ☐ Out of Sequence
- ☐ Outside Dimensions
- ☐ Ovalized
- ☐ Over/Under tolerance
- ☐ Part Incorrect
- ☐ Part Lost/Missing
- ☐ Part Moved
- ☐ Positioned Wrong
- ☐ Power Loss/Surge
- ☐ Pressure/Forced
- ☐ Temperature/Cure
- ☐ Weld
- ☐ Wrong Stock Pulled
- ☐ Other _____

Work Order ID: 97644 *97644*
Parent Item: D4030-041 *D4030-041*
Parent Item Name: Long Basket Assembly (350)

Start Date: 2/21/2013 **Required Date:** 2/28/2013
Start Qty: 1.00 **Required Qty:** 1.00

AN4-12	Purchased	No		100	Each	51.0000	3	3	
AN4-12						**			SP
Bolt									

Location	Loc Qty	Loc Code	
ST356	51		
122800	51		3x

AN310-4	Purchased	No		100	Each	120.0000	3	3	
AN310-4						**			SP
NUT									

Location	Loc Qty	Loc Code	
ST342	120		
122800	2		
123900	18		
124221	100		3x

AN310C4	Purchased	No		100	Each	118.0000	2	2	
AN310C4						**			SP 13-3-13.
Nut									

Location	Loc Qty	Loc Code	
ST342	118		
123831	18		2x
124221	100		

DQA: _____ Date: _____

NCR: Yes / No

WORK ORDER NON-CONFORMANCE / UPDATE

QA Closed: Date:

Work Order: _____

Part No. _____

NCR No. _____

DISPOSITION

- Rework ☐
- Scrap ☐
- Use-as-is ☐
- Work Order Update ☐

AGAINST DEPARTMENT/PROCESS

- Skid-tube ☐
- Machining ☐
- Thermoforming ☐
- Large Fab ☐
- Crosstube ☐
- Small Fab ☐
- Finishing ☐
- Composite ☐
- Water Jet ☐
- Prod. Eng. Coor. ☐
- Rec/Store/Packaging ☐
- Supplier ☐
- Engineering ☐
- Quality ☐
- Other ☐

Root Cause		Date	Step	Qty	Description of work order update or Non-conformance	Initial Chief Eng	Action Description	Sign & Date	Verification	QC Inspector
Doc/Data										
Equip/Tooling										
Operator										
Material										
Setup										
Other										
Process										
Supplier										
Training										
Unapproved										

FAULT CATEGORY

Landing Gear

- ☐ Bending
- ☐ Centre Not Concentric to O/S
- ☐ Cracks
- ☐ Crushed/Crimped
- ☐ Cuffs
- ☐ Heat Treat
- ☐ Inspection Strip in Tube
- ☐ Ripples in Bend
- ☐ Torque Waves in Extrusion
- ☐ Turning Sequence
- ☐ Wave/Twist in Tube

General

- ☐ Bend
- ☐ BOM/Route
- ☐ Broken/Damaged
- ☐ Burrs
- ☐ Contamination
- ☐ Countersink
- ☐ Cut Too Short
- ☐ Drill Holes
- ☐ Drawing
- ☐ Finish
- ☐ Folio
- ☐ Grain
- ☐ Hardware
- ☐ Inspection Incomplete
- ☐ Instructions Incomplete/Unclear
- ☐ Maintenance
- ☐ Mislabeled
- ☐ Misread
- ☐ Offset
- ☐ Out of Calibration
- ☐ Out of Sequence
- ☐ Outside Dimensions
- ☐ Ovalized
- ☐ Over/Under tolerance
- ☐ Part Incorrect
- ☐ Part Lost/Missing
- ☐ Part Moved
- ☐ Positioned Wrong
- ☐ Power Loss/Surge
- ☐ Pressure/Forced
- ☐ Temperature/Cure
- ☐ Weld
- ☐ Wrong Stock Pulled
- ☐ Other

_____

_____

_____

Picklist Print

Thursday, February 21, 2013 10:23:28 AM

Work Order ID: 97644 *97644*

Parent Item: D4030-041 *D4030-041*

Parent Item Name: Long Basket Assembly (350)

Start Date: 2/21/2013 **Required Date:** 2/28/2013

Start Qty: 1.00 **Required Qty:** 1.00

MS21042L3	Purchased	No		100	Each	7,064.000	6	6

MS21042L3

Nut

**

SP

Location	Loc Qty	Loc Code	
FP001	3		
122141	3		
GA	354		
122452	354		
ST314	268		
117885	32		
119017	55		
119075	138		
123265	43		
ST506	6439		
123900	2439		6X
124291	4000		

MS21042L5	Purchased	No		100	Each	1,049.000	4	4

MS21042L5

Nut

**

SP 3-13-13

Location	Loc Qty	Loc Code	
ST314	349		
108827	4		
116548	43		
119109	20		
121652	12		
122452	258		
2937	12		
ST506	700		
123900	700		4X

DQA: _____ Date: _____

NCR: Yes / No

WORK ORDER NON-CONFORMANCE / UPDATE

QA Closed: Date:

Work Order: _____

Part No. _____

NCR No. _____

DISPOSITION

- Rework ☐
- Scrap ☐
- Use-as-is ☐
- Work Order Update ☐

AGAINST DEPARTMENT/PROCESS

- Skid-tube ☐
- Machining ☐
- Thermoforming ☐
- Large Fab ☐
- Crosstube ☐
- Small Fab ☐
- Finishing ☐
- Composite ☐
- Water Jet ☐
- Prod. Eng. Coor. ☐
- Rec/Store/Packaging ☐
- Supplier ☐
- Engineering ☐
- Quality ☐
- Other ☐

Root Cause		Date	Step	Qty	Description of work order update or Non-conformance	Initial Chief Eng	Action Description	Sign & Date	Verification	QC Inspector
Doc/Data	☐									
Equip/Tooling	☐									
Operator	☐									
Material	☐									
Setup	☐									
Other	☐									
Process	☐									
Supplier	☐									
Training	☐									
Unapproved	☐									

FAULT CATEGORY

Landing Gear

- ☐ Bending
- ☐ Centre Not Concentric to O/S
- ☐ Cracks
- ☐ Crushed/Crimped.
- ☐ Cuffs
- ☐ Heat Treat
- ☐ Inspection Strip in Tube
- ☐ Ripples in Bend
- ☐ Torque Waves in Extrusion
- ☐ Turning Sequence
- ☐ Wave/Twist in Tube

General

- ☐ Bend
- ☐ BOM/Route
- ☐ Broken/Damaged
- ☐ Burrs
- ☐ Contamination
- ☐ Countersink
- ☐ Cut Too Short
- ☐ Drill Holes
- ☐ Drawing
- ☐ Finish
- ☐ Folio
- ☐ Grain
- ☐ Hardware
- ☐ Inspection Incomplete
- ☐ Instructions Incomplete/Unclear
- ☐ Maintenance
- ☐ Mislabeled
- ☐ Misread
- ☐ Offset
- ☐ Out of Calibration
- ☐ Out of Sequence
- ☐ Outside Dimensions
- ☐ Ovalized
- ☐ Over/Under tolerance
- ☐ Part Incorrect
- ☐ Part Lost/Missing
- ☐ Part Moved
- ☐ Positioned Wrong
- ☐ Power Loss/Surge
- ☐ Pressure/Forced
- ☐ Temperature/Cure
- ☐ Weld
- ☐ Wrong Stock Pulled
- ☐ Other _____

Work Order ID: 97644 *97644*
Parent Item: D4030-041 *D4030-041*
Parent Item Name: Long Basket Assembly (350)

Start Date: 2/21/2013 **Required Date:** 2/28/2013
Start Qty: 1.00 **Required Qty:** 1.00

MS24665-151	Purchased	No		100	Each	143.0000	3	**	3 SP

MS24665-151
Cotter Pin

Location	Loc Qty	Loc Code	
GA	38		
17566	38		
ST323	105		
122802	105		3x

MS24665-300	Purchased	No		100	Each	239.0000	2	**	2 SP

MS24665-300
Cotter Pin

Location	Loc Qty	Loc Code	
GA	39		
118234	39		
ST299	200		
124555	200		2x

NAS1149F0432P	Purchased	No		100	Each	958.0000	6	**	6 SP

NAS1149F0432P
Washer

Location	Loc Qty	Loc Code	
ST295	958		
122151	2		
123522	4		
123900	552		60x
124580	400		

NAS1149F0563P	Purchased	No		100	Each	774.0000	4	**	4 SP 2-3-13

NAS1149F0563P
Washer

Location	Loc Qty	Loc Code	
ST295	774		
121350	774		4x

DQA: _____ Date: _____

NCR: Yes / No

WORK ORDER NON-CONFORMANCE / UPDATE

QA Closed: Date:

Work Order: _____

Part No. _____

NCR No. _____

DISPOSITION

- Rework ☐
- Scrap ☐
- Use-as-is ☐
- Work Order Update ☐

AGAINST DEPARTMENT/PROCESS

- Skid-tube ☐
- Machining ☐
- Thermoforming ☐
- Large Fab ☐
- Crosstube ☐
- Small Fab ☐
- Finishing ☐
- Composite ☐
- Water Jet ☐
- Prod. Eng. Coor. ☐
- Rec/Store/Packaging ☐
- Supplier ☐
- Engineering ☐
- Quality ☐
- Other ☐

Root Cause		Date	Step	Qty	Description of work order update or Non-conformance	Initial Chief Eng	Action Description	Sign & Date	Verification	QC Inspector
Doc/Data										
Equip/Tooling										
Operator										
Material										
Setup										
Other										
Process										
Supplier										
Training										
Unapproved										

FAULT CATEGORY

Landing Gear

- ☐ Bending
- ☐ Centre Not Concentric to O/S
- ☐ Cracks
- ☐ Crushed/Crimped.
- ☐ Cuffs
- ☐ Heat Treat
- ☐ Inspection Strip in Tube
- ☐ Ripples in Bend
- ☐ Torque Waves in Extrusion
- ☐ Turning Sequence
- ☐ Wave/Twist in Tube

General

- ☐ Bend
- ☐ BOM/Route
- ☐ Broken/Damaged
- ☐ Burrs
- ☐ Contamination
- ☐ Countersink
- ☐ Cut Too Short
- ☐ Drill Holes
- ☐ Drawing
- ☐ Finish
- ☐ Folio
- ☐ Grain
- ☐ Hardware
- ☐ Inspection Incomplete
- ☐ Instructions Incomplete/Unclear
- ☐ Maintenance
- ☐ Mislabeled
- ☐ Misread
- ☐ Offset
- ☐ Out of Calibration
- ☐ Out of Sequence
- ☐ Outside Dimensions
- ☐ Ovalized
- ☐ Over/Under tolerance
- ☐ Part Incorrect
- ☐ Part Lost/Missing
- ☐ Part Moved
- ☐ Positioned Wrong
- ☐ Power Loss/Surge
- ☐ Pressure/Forced
- ☐ Temperature/Cure
- ☐ Weld
- ☐ Wrong Stock Pulled
- ☐ Other _____

Work Order ID: 97644
97644
Parent Item: D4030-041
D4030-041
Parent Item Name: Long Basket Assembly (350)

Start Date: 2/21/2013 **Required Date:** 2/28/2013
Start Qty: 1.00 **Required Qty:** 1.00

NAS1149F0332P	Purchased	No		100	Each	10,560.00	8	8

NAS1149F0332P
**
WASHER

Location	Loc Qty	Loc Code	
GA	194		
122063	194		
ST294	363		
122063	363		8 x
ST295	3		
123352	3		
st510	10000		
123900	10000		

NAS1149C0432R	Purchased	No		100	Each	2,818.000	2	2

NAS1149C0432R
**
Washer

Location	Loc Qty	Loc Code	
GA	33		
121255	33		
ST292	2785		
119124	6		
122441	2779		2 x

DQA: _____ Date: _____

NCR: Yes / No

WORK ORDER NON-CONFORMANCE / UPDATE

QA Closed: Date:

Work Order: _____

Part No. _____

NCR No. _____

DISPOSITION

- Rework ☐
- Scrap ☐
- Use-as-is ☐
- Work Order Update ☐

AGAINST DEPARTMENT/PROCESS

- Skid-tube ☐
- Machining ☐
- Thermoforming ☐
- Large Fab ☐
- Crosstube ☐
- Small Fab ☐
- Finishing ☐
- Composite ☐
- Water Jet ☐
- Prod. Eng. Coor. ☐
- Rec/Store/Packaging ☐
- Supplier ☐
- Engineering ☐
- Quality ☐
- Other ☐

Root Cause		Date	Step	Qty	Description of work order update or Non-conformance	Initial Chief Eng	Action Description	Sign & Date	Verification	QC Inspector
Doc/Data										
Equip/Tooling										
Operator										
Material										
Setup										
Other										
Process										
Supplier										
Training										
Unapproved										

FAULT CATEGORY

Landing Gear

- ☐ Bending
- ☐ Centre Not Concentric to O/S
- ☐ Cracks
- ☐ Crushed/Crimped.
- ☐ Cuffs
- ☐ Heat Treat
- ☐ Inspection Strip in Tube
- ☐ Ripples in Bend
- ☐ Torque Waves in Extrusion
- ☐ Turning Sequence
- ☐ Wave/Twist in Tube

General

- ☐ Bend
- ☐ BOM/Route
- ☐ Broken/Damaged
- ☐ Burrs
- ☐ Contamination
- ☐ Countersink
- ☐ Cut Too Short
- ☐ Drill Holes
- ☐ Drawing
- ☐ Finish
- ☐ Folio
- ☐ Grain
- ☐ Hardware
- ☐ Inspection Incomplete
- ☐ Instructions Incomplete/Unclear
- ☐ Maintenance
- ☐ Mislabeled
- ☐ Misread
- ☐ Offset
- ☐ Out of Calibration
- ☐ Out of Sequence
- ☐ Outside Dimensions
- ☐ Ovalized
- ☐ Over/Under tolerance
- ☐ Part Incorrect
- ☐ Part Lost/Missing
- ☐ Part Moved
- ☐ Positioned Wrong
- ☐ Power Loss/Surge
- ☐ Pressure/Forced
- ☐ Temperature/Cure
- ☐ Weld
- ☐ Wrong Stock Pulled
- ☐ Other _____

ITEM	QTY -041	QTY -043	P/N	DESCRIPTION
	X		D4030-041	LONG BASKET ASSY (350)
		X	D4030-043	LONG BASKET ASSY, LIGHT LID (350)
1	1	1	D2530	HANDLE WELDMENT
2	2	2	D2535	SPRING
3	2	2	D2537	BUSHING
4	1	1	D3913-041	LONG BASKET BASE ASSY (350)
5	1		D3914-041	LONG BASKET LID ASSY (350)
6		1	D3915-041	LIGHT LID ASSY-LONG BASKET
7	6	6	D3917-3	WASHER
8	2	2	D3953-3	GAS SPRING STUD, LID
9	2	2	D3953-7	GAS SPRING SPACER
10	2	2	D3953-9	GAS SPRING WASHER
11	2	2	D3953-17	GAS SPRING SPACER
12	1	1	D3953-19	GAS SPRING BRACKET
13	1	1	D3953-21	GAS SPRING BRACKET
14	1	1	D3969-3	SPRING
15	4	4	AN3-14A	BOLT
16	2		AN3-16A	BOLT
17		2	AN3-20A	BOLT
18	3	3	AN4-12	BOLT (DRILLED)
19	4	2	AN5-17A	BOLT
20		2	AN5-21A	BOLT
21	3	3	AN310-4	NUT, CASTELLATED
22	2	2	AN310C4	NUT, CASTELLATED
23	6	6	MS21042L3	NUT
24	4	4	MS21042L5	NUT
25	3	3	MS24665-151	COTTER PIN
26	2	2	MS24665-300	COTTER PIN
27	6	6	NAS1149F0432P	WASHER
28	4	4	NAS1149F0563P	WASHER
30	8	8	NAS1149F0332P	WASHER
31	2	2	NAS1149C0432R	WASHER

C

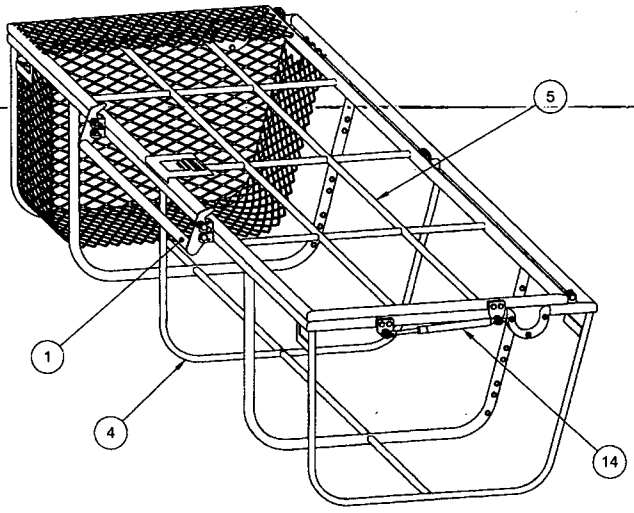

D4030-041 LONG BASKET ASSY (350)
(MESH SHOWN LOCALLY FOR CLARITY)

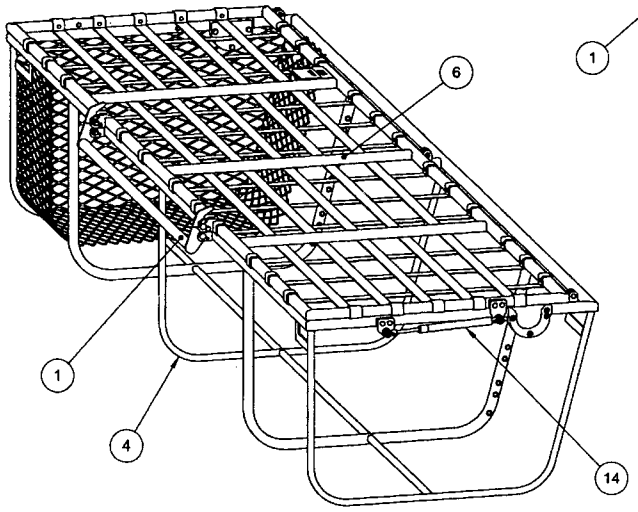

D4030-043 LONG BASKET ASSY, LIGHT LID (350)
(MESH SHOWN LOCALLY FOR CLARITY)

97644
13-02-21

RELEASED
10.08.12
ECN 10-596

NOTES:
1) MATERIAL: N/A
2) FINISH: NONE
3) TOLERANCES: PER DART QSI 018 UNLESS OTHERWISE NOTED
4) UNITS: INCHES UNLESS OTHERWISE NOTED
5) BREAK SHARP EDGES: N/A
6) IDENTIFICATION: N/A
7) WEIGHT: -041: 72 lbs APPROX
-043: 57 lbs APPROX

REV.	DESCRIPTION	BY	DATE
C	QTY FOR ITEMS #30 & #31 UNDER -043 WERE MISSING (B8-1); QTY FOR ITEM #3 WAS 4 (D6-1), ONLY 2 ARE REQUIRED, AFFECTS SECTION C-C (D3-3).	MB	10.07.23
B	AN5-21A BOLT WAS AN5-19A: BOM & (D3-3)	JPH	10.04.06
A	NEW ISSUE	JPH	10.03.16

DESIGN	AJS	**DART AEROSPACE LTD** HAWKESBURY, ONTARIO, CANADA
DRAWN		
CHECKED		DRAWING NO. D4030 — REV. C — SHEET 1 OF 3
MFG. APPR.	JFS	
APPROVED		TITLE LONG BASKET ASSY (350) — SCALE NTS
DE APPR.		
DATE	10.07.23	

COPYRIGHT © 2010 BY DART AEROSPACE LTD
THIS DOCUMENT IS PRIVATE AND CONFIDENTIAL AND IS SUPPLIED ON THE EXPRESS CONDITION THAT IT IS NOT TO BE USED FOR ANY PURPOSE OR COPIED OR COMMUNICATED TO ANY OTHER PERSON WITHOUT WRITTEN PERMISSION FROM DART AEROSPACE LTD.

DQA: _____ Date: _____

NCR: Yes / No

WORK ORDER NON-CONFORMANCE / UPDATE

QA Closed: Date:

Work Order: _____

Part No. _____

NCR No. _____

DISPOSITION

- Rework ☐
- Scrap ☐
- Use-as-is ☐
- Work Order Update ☐

AGAINST DEPARTMENT/PROCESS

- Skid-tube ☐
- Machining ☐
- Thermoforming ☐
- Large Fab ☐
- Crosstube ☐
- Small Fab ☐
- Finishing ☐
- Composite ☐
- Water Jet ☐
- Prod. Eng. Coor. ☐
- Rec/Store/Packaging ☐
- Supplier ☐
- Engineering ☐
- Quality ☐
- Other ☐

Root Cause		Date	Step	Qty	Description of work order update or Non-conformance	Initial Chief Eng	Action Description	Sign & Date	Verification	QC Inspector
Doc/Data										
Equip/Tooling										
Operator										
Material										
Setup										
Other										
Process										
Supplier										
Training										
Unapproved										

FAULT CATEGORY

Landing Gear

- ☐ Bending
- ☐ Centre Not Concentric to O/S
- ☐ Cracks
- ☐ Crushed/Crimped.
- ☐ Cuffs
- ☐ Heat Treat
- ☐ Inspection Strip in Tube
- ☐ Ripples in Bend
- ☐ Torque Waves in Extrusion
- ☐ Turning Sequence
- ☐ Wave/Twist in Tube

General

- ☐ Bend
- ☐ BOM/Route
- ☐ Broken/Damaged
- ☐ Burrs
- ☐ Contamination
- ☐ Countersink
- ☐ Cut Too Short
- ☐ Drill Holes
- ☐ Drawing
- ☐ Finish
- ☐ Folio
- ☐ Grain
- ☐ Hardware
- ☐ Inspection Incomplete
- ☐ Instructions Incomplete/Unclear
- ☐ Maintenance
- ☐ Mislabeled
- ☐ Misread
- ☐ Offset
- ☐ Out of Calibration
- ☐ Out of Sequence
- ☐ Outside Dimensions
- ☐ Ovalized
- ☐ Over/Under tolerance
- ☐ Part Incorrect
- ☐ Part Lost/Missing
- ☐ Part Moved
- ☐ Positioned Wrong
- ☐ Power Loss/Surge
- ☐ Pressure/Forced
- ☐ Temperature/Cure
- ☐ Weld
- ☐ Wrong Stock Pulled
- ☐ Other _____

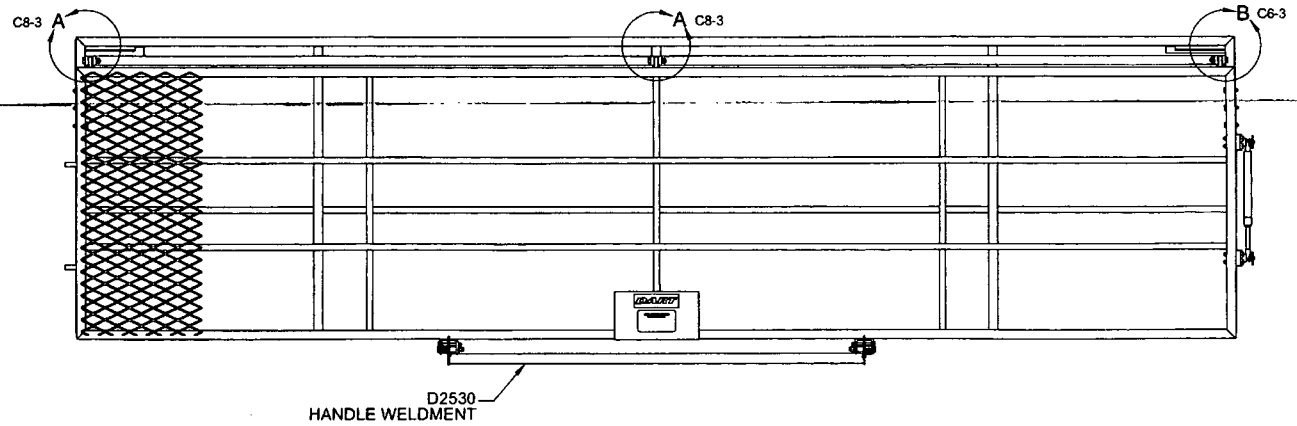

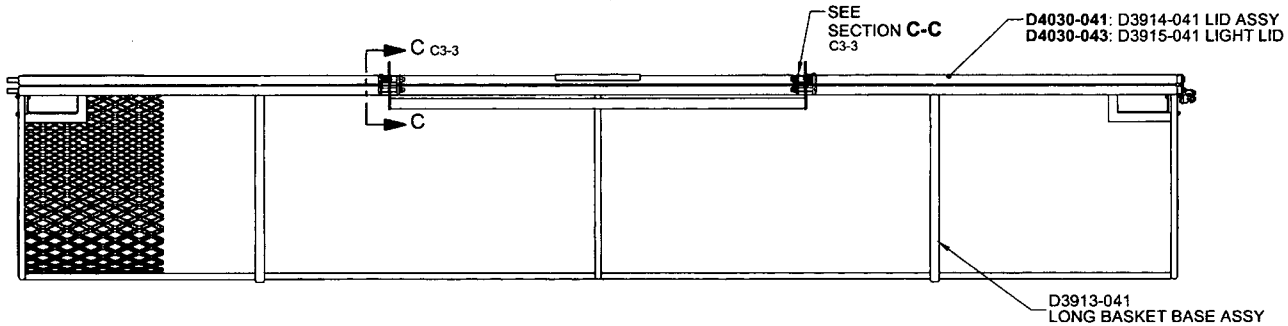

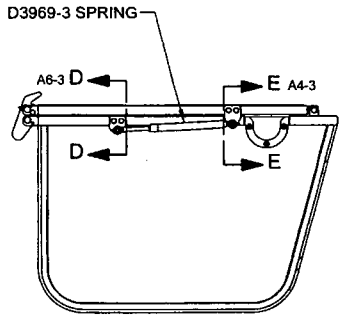

q7644

RELEASED
10.08.17 CP

D4030-041 LONG BASKET ASSY (350) (SHOWN)
(MESH SHOWN LOCALLY OR REMOVED FOR CLARITY)

D4030-043 SHORT BASKET ASSY, LIGHT LID (350)
(MESH SHOWN LOCALLY FOR CLARITY)

DESIGN	AJS	**DART AEROSPACE LTD** HAWKESBURY, ONTARIO, CANADA
DRAWN		
CHECKED		DRAWING NO. D4030 REV. C
MFG. APPR.	SFS	SHEET 2 OF 3
APPROVED		TITLE LONG BASKET ASSY (350) SCALE NTS
DE APPR.		
DATE	10.07.23	

COPYRIGHT © 2010 BY DART AEROSPACE LTD
THIS DOCUMENT IS PRIVATE AND CONFIDENTIAL AND IS SUPPLIED ON THE EXPRESS CONDITION THAT IT IS NOT TO BE USED FOR ANY PURPOSE OR COPIED OR COMMUNICATED TO ANY OTHER PERSON WITHOUT WRITTEN PERMISSION FROM DART AEROSPACE LTD.

DQA: _____ Date: _____

NCR: Yes / No

WORK ORDER NON-CONFORMANCE / UPDATE

QA Closed: Date:

Work Order: _____

Part No. _____

NCR No. _____

DISPOSITION

- Rework ☐
- Scrap ☐
- Use-as-is ☐
- Work Order Update ☐

AGAINST DEPARTMENT/PROCESS

- Skid-tube ☐
- Machining ☐
- Thermoforming ☐
- Large Fab ☐
- Crosstube ☐
- Small Fab ☐
- Finishing ☐
- Composite ☐
- Water Jet ☐
- Prod. Eng. Coor. ☐
- Rec/Store/Packaging ☐
- Supplier ☐
- Engineering ☐
- Quality ☐
- Other ☐

Root Cause		Date	Step	Qty	Description of work order update or Non-conformance	Initial Chief Eng	Action Description	Sign & Date	Verification	QC Inspector
Doc/Data										
Equip/Tooling										
Operator										
Material										
Setup										
Other										
Process										
Supplier										
Training										
Unapproved										

FAULT CATEGORY

Landing Gear

- ☐ Bending
- ☐ Centre Not Concentric to O/S
- ☐ Cracks
- ☐ Crushed/Crimped.
- ☐ Cuffs
- ☐ Heat Treat
- ☐ Inspection Strip in Tube
- ☐ Ripples in Bend
- ☐ Torque Waves in Extrusion
- ☐ Turning Sequence
- ☐ Wave/Twist in Tube

General

- ☐ Bend
- ☐ BOM/Route
- ☐ Broken/Damaged
- ☐ Burrs
- ☐ Contamination
- ☐ Countersink
- ☐ Cut Too Short
- ☐ Drill Holes
- ☐ Drawing
- ☐ Finish
- ☐ Folio
- ☐ Grain
- ☐ Hardware
- ☐ Inspection Incomplete
- ☐ Instructions Incomplete/Unclear
- ☐ Maintenance
- ☐ Mislabeled
- ☐ Misread
- ☐ Offset
- ☐ Out of Calibration
- ☐ Out of Sequence
- ☐ Outside Dimensions
- ☐ Ovalized
- ☐ Over/Under tolerance
- ☐ Part Incorrect
- ☐ Part Lost/Missing
- ☐ Part Moved
- ☐ Positioned Wrong
- ☐ Power Loss/Surge
- ☐ Pressure/Forced
- ☐ Temperature/Cure
- ☐ Weld
- ☐ Wrong Stock Pulled
- ☐ Other

_____

_____

_____

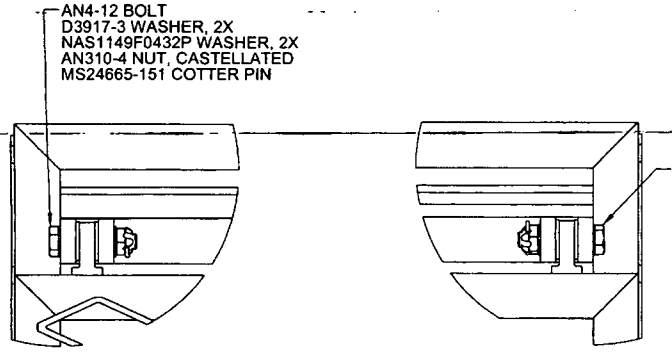

DETAIL A D8-2 D5-2

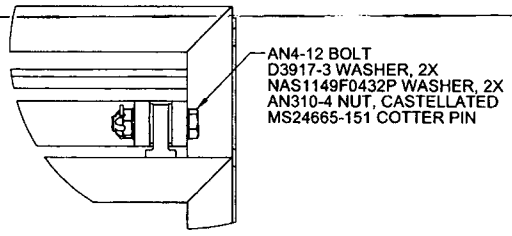

DETAIL B D3-2

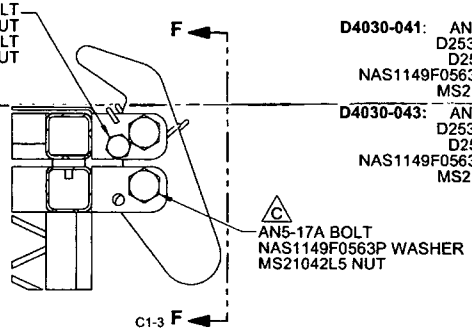

SECTION C-C B4-2 B6-2

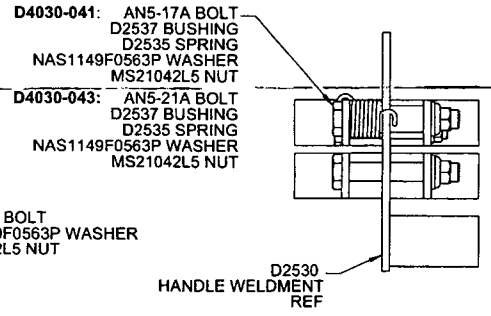

VIEW F-F C3-3

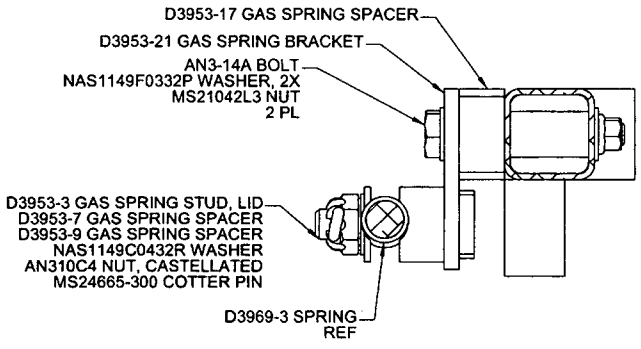

SECTION D-D B2-2

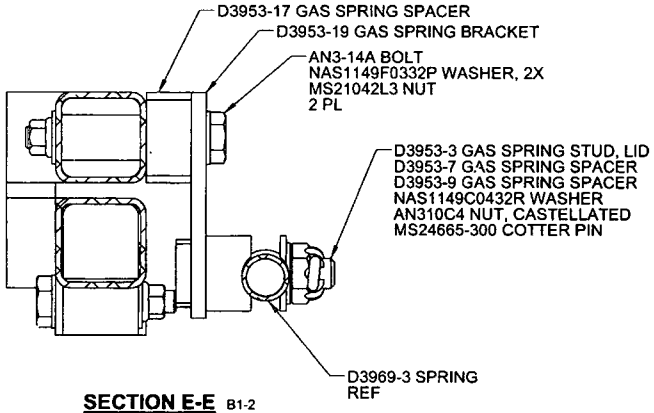

SECTION E-E B1-2

976044

RELEASED
10.08.12

DESIGN	AJS	**DART AEROSPACE LTD** HAWKESBURY, ONTARIO, CANADA
DRAWN		DRAWING NO. D4030 REV. C
CHECKED		SHEET 3 OF 3
MFG. APPR.	T.F.S.	TITLE LONG BASKET ASSY (350) SCALE NTS
APPROVED		
DE APPR.		
DATE	10.07.23	

COPYRIGHT © 2010 BY DART AEROSPACE LTD
THIS DOCUMENT IS PRIVATE AND CONFIDENTIAL AND IS SUPPLIED ON THE EXPRESS CONDITION THAT IT IS NOT TO BE USED FOR ANY PURPOSE OR COPIED OR COMMUNICATED TO ANY OTHER PERSON WITHOUT WRITTEN PERMISSION FROM DART AEROSPACE LTD

DQA: _____ Date: _____

NCR: Yes / No

WORK ORDER NON-CONFORMANCE / UPDATE

QA Closed: Date:

Work Order: _____

Part No. _____

NCR No. _____

DISPOSITION

- Rework ☐
- Scrap ☐
- Use-as-is ☐
- Work Order Update ☐

AGAINST DEPARTMENT/PROCESS

- Skid-tube ☐
- Machining ☐
- Thermoforming ☐
- Large Fab ☐
- Crosstube ☐
- Small Fab ☐
- Finishing ☐
- Composite ☐
- Water Jet ☐
- Prod. Eng. Coor. ☐
- Rec/Store/Packaging ☐
- Supplier ☐
- Engineering ☐
- Quality ☐
- Other ☐

Root Cause		Date	Step	Qty	Description of work order update or Non-conformance	Initial Chief Eng	Action Description	Sign & Date	Verification	QC Inspector
Doc/Data										
Equip/Tooling										
Operator										
Material										
Setup										
Other										
Process										
Supplier										
Training										
Unapproved										

FAULT CATEGORY

Landing Gear

- ☐ Bending
- ☐ Centre Not Concentric to O/S
- ☐ Cracks
- ☐ Crushed/Crimped.
- ☐ Cuffs
- ☐ Heat Treat
- ☐ Inspection Strip in Tube
- ☐ Ripples in Bend
- ☐ Torque Waves in Extrusion
- ☐ Turning Sequence
- ☐ Wave/Twist in Tube

General

- ☐ Bend
- ☐ BOM/Route
- ☐ Broken/Damaged
- ☐ Burrs
- ☐ Contamination
- ☐ Countersink
- ☐ Cut Too Short
- ☐ Drill Holes
- ☐ Drawing
- ☐ Finish
- ☐ Folio
- ☐ Grain
- ☐ Hardware
- ☐ Inspection Incomplete
- ☐ Instructions Incomplete/Unclear
- ☐ Maintenance
- ☐ Mislabeled
- ☐ Misread
- ☐ Offset
- ☐ Out of Calibration
- ☐ Out of Sequence
- ☐ Outside Dimensions
- ☐ Ovalized
- ☐ Over/Under tolerance
- ☐ Part Incorrect
- ☐ Part Lost/Missing
- ☐ Part Moved
- ☐ Positioned Wrong
- ☐ Power Loss/Surge
- ☐ Pressure/Forced
- ☐ Temperature/Cure
- ☐ Weld
- ☐ Wrong Stock Pulled
- ☐ Other

_____

_____

_____